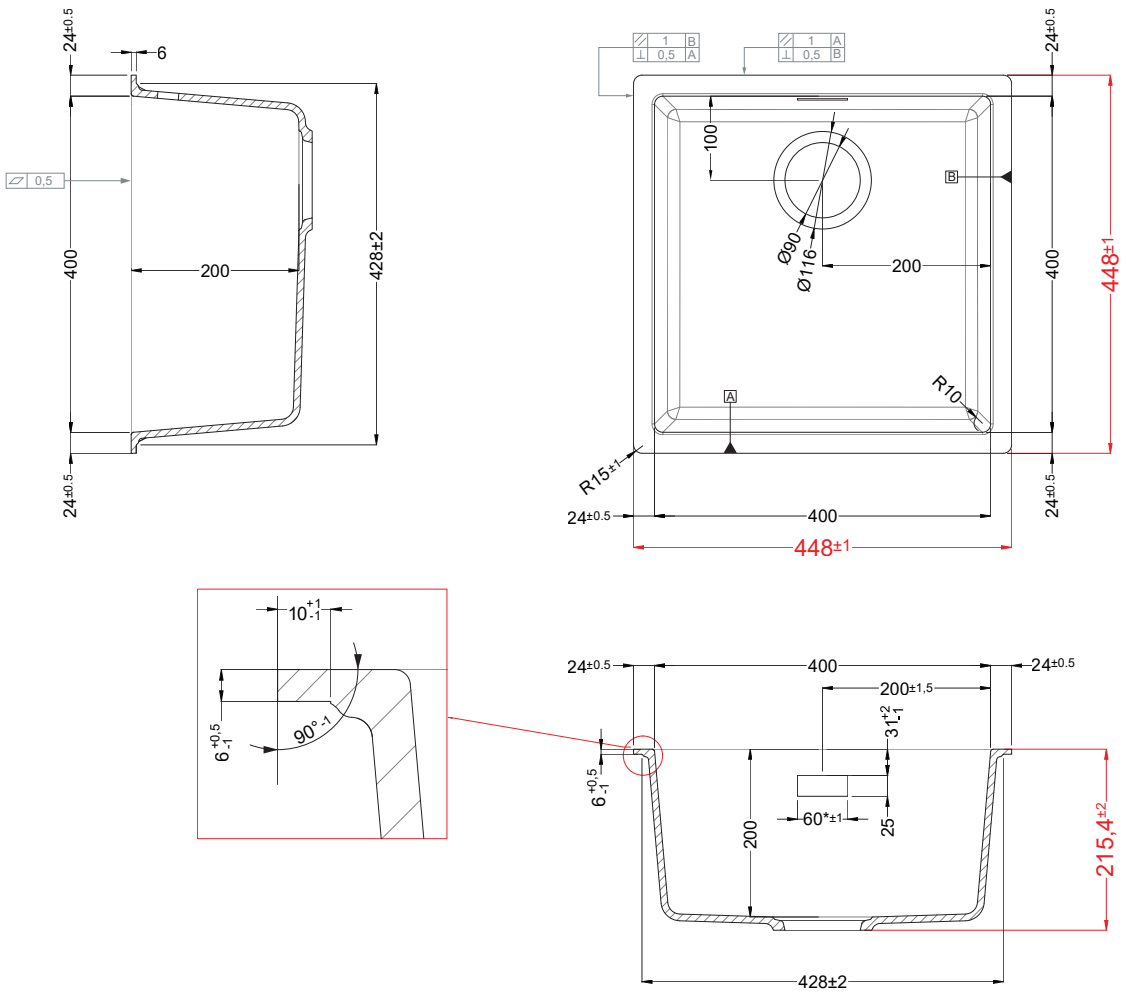

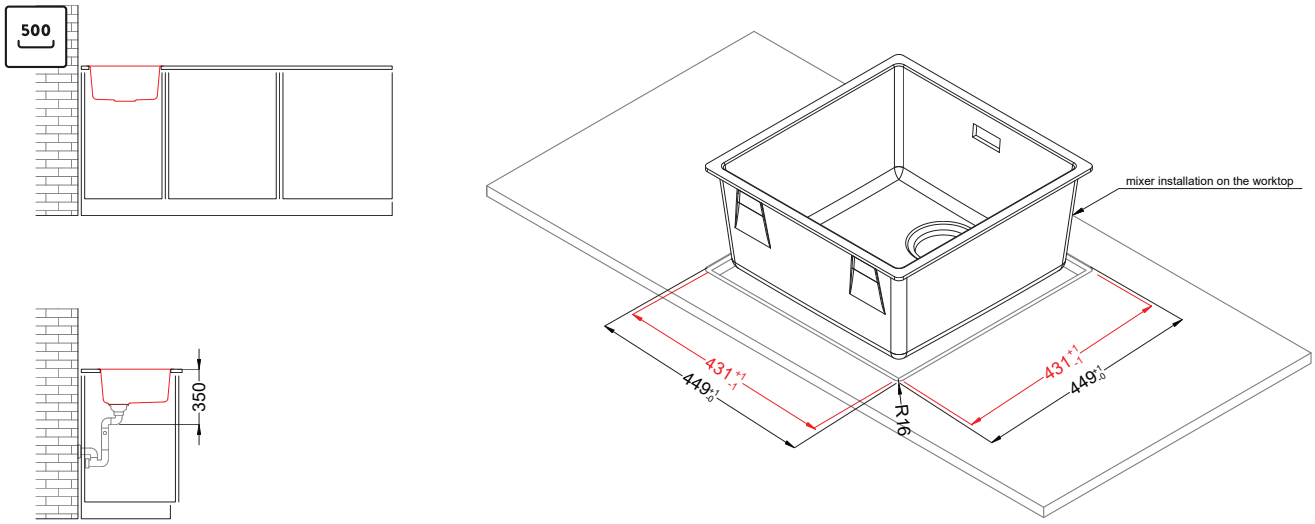

Active 40 Flushmount

general tolerances where not expressly communicated ±0,4%
connection dimensions according to UNI EN 695
eventual exception are reported with *

elleci